# MARKET SERIES

## SELF-SERVE REFRIGERATED BAKERY CASE

### OPTIONAL ACCESSORIES:

* Special Case Height (34" or 38")
* Front Bumper Rail (Black, White, Green, Gray)
* Remote Refrigeration
* Decorative End Panel (Black, White, Green, Gray)
* Accent Base Light
* Promolux Lighting

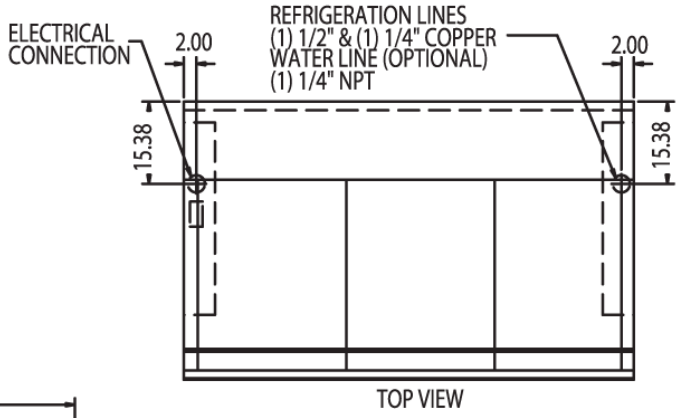


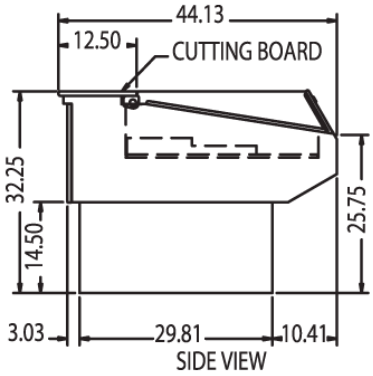


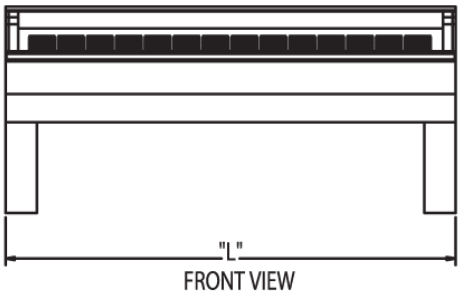


### SPECIFICATIONS:

| Model | *Dimensions L W H | Approx. Shipping Weight (lbs) | **Self-Contained 120/60/1 | **Remote 120/60/1 |
|---|---|---|---|---|
| SQ-3CBSS | 36" x 44 1/8" x 32 1/4" | 675 | 1/2 HP - 11.5 AMPS | 6 AMPS |
| SQ-4CBSS | 48" x 44 1/8" x 32 1/4" | 745 | 1/2 HP - 13.8 AMPS | 7 AMPS |
| SQ-5CBSS | 60" x 44 1/8" x 32 1/4" | 895 | 1/2 HP - 13.8 AMPS | 7 AMPS |
| SQ-6CBSS | 72" x 44 1/8" x 32 1/4" | 1,035 | 1/2 HP - 14.8 AMPS | 7 AMPS |
| SQ-8CBSS | 96" x 44 1/8" x 32 1/4" | 1,135 | 3/4 HP - 16.0 AMPS | 8 AMPS |

- *Without decorative end panel.
- **Plus general receptacle 120V, 15 AMP. (2nd circuit required.)
- **When ordering, specify case line-up and pedestal or panel design.**
- Cases are designed to operate in an environment of 75° ambient and 55% relative humidity.
- Due to continuing engineering improvements, specifications are subject to change without notice.

SANITATION CLASSIFIED

FEDERAL

a Standex company